SIEMENS

OEM

2-Port Seat Valves with Flange, PN 25

VVF529...

- **Nodular cast iron EN-GJS-400-18-LT valve body**
- **DN 50...150**
- **k_{vs} 31…300 m^3/h**
- **Can be equipped with SKD…-, SKB…- or SKC…- electrohydraulic actuators**

Use

For use in district heating, heating, ventilating, and air conditioning systems as a control or safety shutoff valve.
For open and closed circuits (mind cavitation, refer to page 5).

Type summary

Type reference	DN	k_{vs} [m^3 / h]	S_v
VVF529.50K	50	31	> 50
VVF529.65K	65	49	
VVF529.80K	80	78	
VVF529.100K	100	124	
VVF529.125K	125	200	
VVF529.150K	150	300	

DN = Nominal size
k_{vs} = Nominal flow rate of cold water (5…30 °C) through the fully open valve (H_{100}) by a differential pressure of 100 kPa (1 bar)
S_v = Rangeability k_{vs} / k_{vr}
k_{vr} = Smallest k_v value, at which the flow characteristic tolerances can still be maintained, by a differential pressure of 100 kPa (1 bar)

Order

When ordering please give quantity, product name and type reference.

Example: 2 2-port valves VVF529.80K

Delivery

Valves, actuators and accessories are packed and supplied separately.
The valves are supplied without counter-flanges and without flange gaskets.

Spare parts

PTFE sealing gland

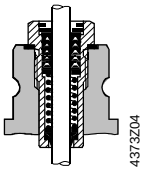

for VVF529…K	DN 50…65	(stem Ø 12 mm)	**74 284 0022 0**
for VVF529…K	DN 80…150	(stem Ø 18 mm)	**74 284 0023 0**

Equipment combinations

Valves		Actuators					
		SKD... [1]		SKB...		SKC...	
	H_{100}	Δp_{max}	Δp_s	Δp_{max}	Δp_s	Δp_{max}	Δp_s
	[mm]	[kPa]					
VVF529.50K	20	1600	1600	1600	2500		
VVF529.65K							
VVF529.80K	40					1600	2500
VVF529.100K							
VVF529.125K							
VVF529.150K							

[1] Usable up to maximum medium temperature of 150 °C

H_{100} = Nominal stroke
Δp_{max} = Maximum permissible differential pressure across the valve, valid for the entire actuating range of the motorized valve
Δp_s = Maximum permissible differential pressure at which the motorised valve will close securely against the pressure (close off pressure).

Actuator overview

Type	Actuator type	Operating voltage	Positioning signal	Spring return	Positioning time	Positioning force	Data sheet
SKD32.50	Electro-hydraulic	AC 230 V	3- position	No	120 s	1000 N	N4561
SKD32.21				Yes	30 s		
SKD32.51					120 s		
SKD82.50		AC 24 V		No			
SKD82.51				Yes			
SKD60			DC 0…10 V [1)]	No	30 s		N4563
SKD62…				Yes			
SKB32.50	Electro-hydraulic	AC 230 V	3- position	No	120 s	2800 N	N4564
SKB32.51				Yes			
SKB82.50		AC 24 V		No			
SKB82.51				Yes			
SKB60			DC 0…10 V [1)]	No			N4566
SKB62…				Yes			
SKC32.60	Electro-hydraulic	AC 230 V	3- position	No	120 s	2800 N	N4564
SKC32.61				Yes			
SKC82.60		AC 24 V		No			
SKC82.61				Yes			
SKC60			DC 0…10 V [1)]	No			N4566
SKC62…				Yes			

[1)] or DC 4…20 mA

Technical design / mechanical design

Valve cross section

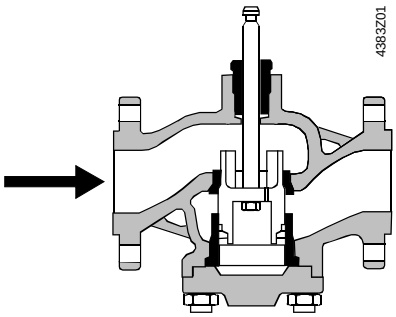

A guided, pressure-released slot plug is used that is directly connected to the valve stem.

The seat is screwed to the valve body with the aid of special gland material.

⚠ **The 2-port seat valve does not become a 3-port valve by removing the blank flange!**

Flow diagram

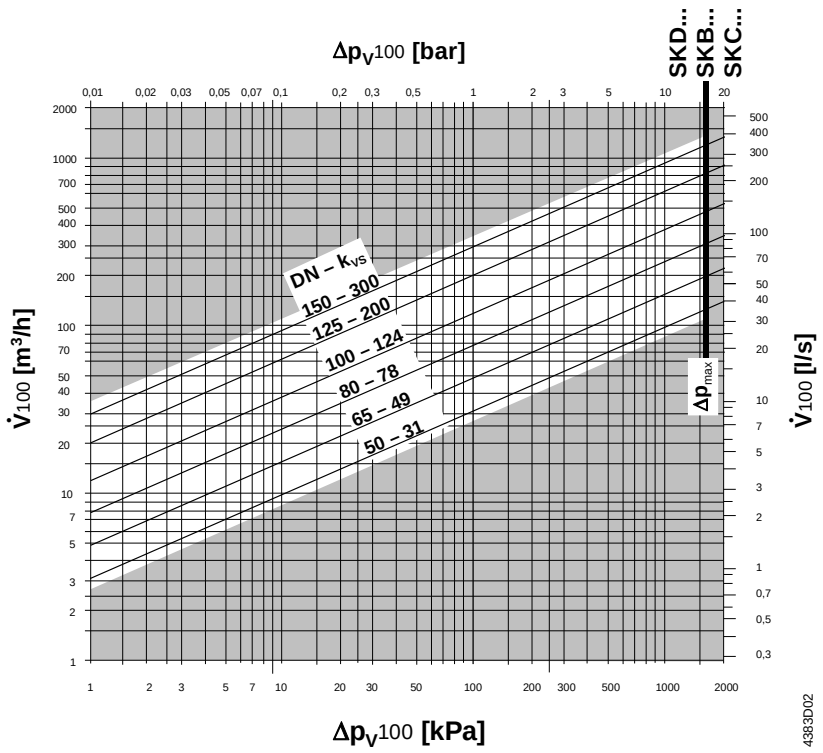

Δp_{max}	=	Maximum permissible differential pressure across the valve, valid for the entire actuating range of the motorised valve
Δp_{v100}	=	Differential pressure across the fully open valve and the valve's control path by a volume flow V_{100}
$\dot{V}_{100}$	=	Volumetric flow through the fully open valve (H_{100})
100 kPa	=	1 bar ≈ 10 mWC
1 m^3/h	=	0.278 l/s water at 20 °C

Valve flow characteristic

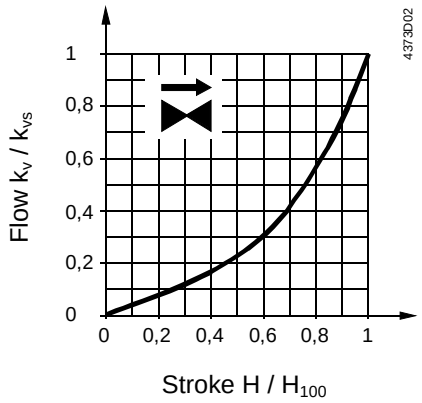

0…30 % → linear
30…100 % → equal percentage
n_{gl} = 3 as per VDI / VDE 2173

Cavitation

Cavitation accelerates wear on the valve plug and seat, and also results in undesirable noise. Cavitation can be avoided by not exceeding the differential pressure shown in the flow diagram on page 4 and by adhering to the static pressures shown below.

Note on chilled water

To avoid cavitation in chilled water circuits ensure sufficient counter pressure at valve outlet, e.g. by a throttling valve after the heat exchanger. Select the pressure drop across the valve at maximum according to the 80 °C curve in the flow diagram below.

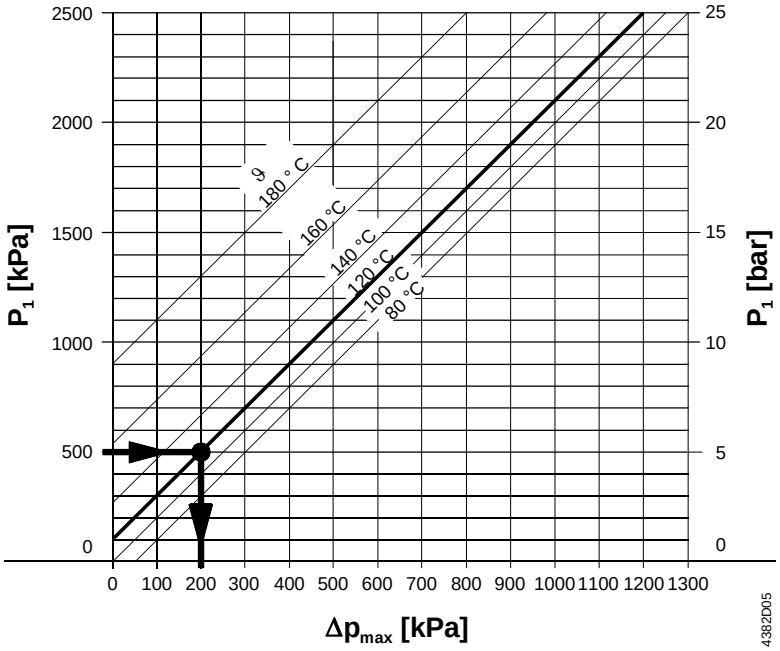

Δp_{max} = Differential pressure with valve almost closed, at which cavitation can largely be avoided

p_1 = Static pressure at inlet

p_3 = Static pressure at outlet

M = Pump

ϑ = Water temperature

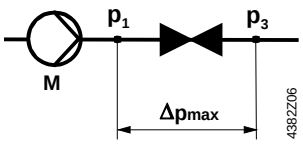

High temperature hot water example:

Pressure p_1 at valve inlet: 500 kPa (5 bar)
Water temperature: 120 °C

From the diagram above, it will be seen that with the valve almost closed, the maximum permissible differential pressure Δp_{max} is 200 kPa (2 bar).

Chilled water example:

Spring water cooling as an example of avoiding cavitation:

Chilled water = 12 °C

p_1 = 500 kPa (5 bar)

p_4 = 100 kPa (1 bar) (atmospheric pressure)

Δp_{vmax} = 300 kPa (3 bar)

$\Delta p_{3\text{-}3'}$ = 20 kPa (0,2 bar)

Δp_D (throttle) = 80 kPa (0,8 bar)

p_3' = pressure after consumer in kPa

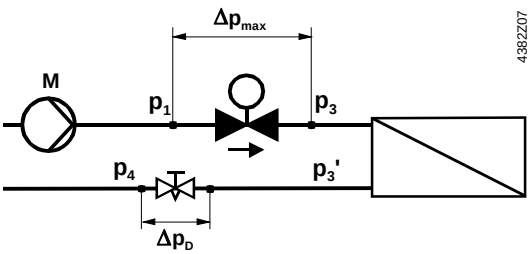

Working pressure and medium temperature

Fluids

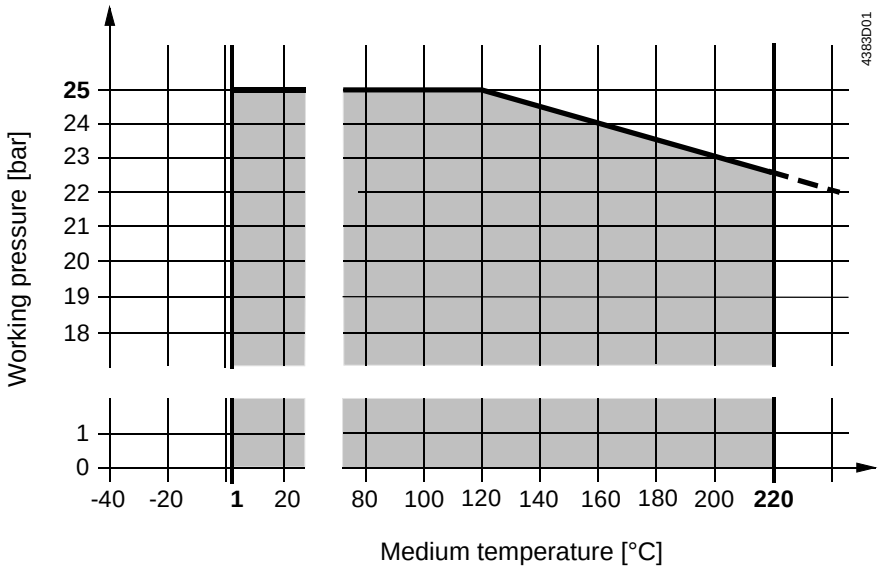

Working pressure and medium temperature staged as per ISO 7005

Saturated steam
Superheated steam

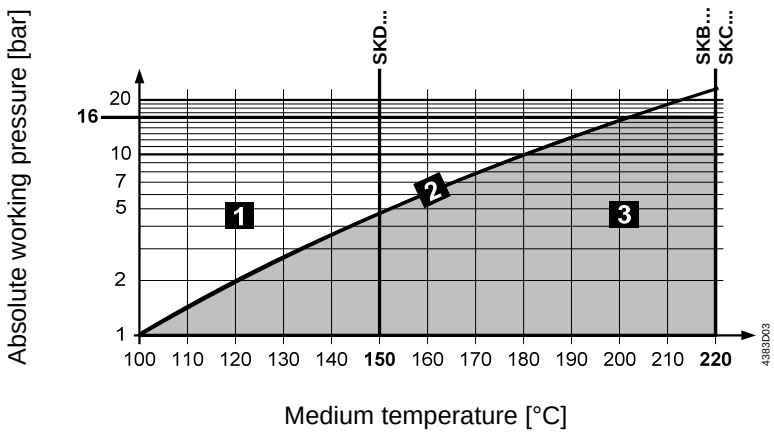

1	wet steam	avoid
2	saturated steam	permissible range of use
3	superheated steam	

Recommendation

For saturated steam and superheated steam the differential pressure Δp_{max} across the valve should be close to the critical pressure ratio.

$$\text{Pressure ratio} = \frac{p_1 - p_3}{p_1} \cdot 100\%$$

p_1 = absolute pressure before valve in kPa
p_3 = absolute pressure after valve in kPa

Calculation of the k_{vs} value for steam

Subcritical range

$$\frac{p_1 - p_3}{p_1} \cdot 100\% < 42\%$$

Pressure ratio < 42% subcritical

$$k_{vs} = 4.4 \cdot \frac{\dot{m}}{\sqrt{p_3 \cdot (p_1 - p_3)}} \cdot k$$

$\dot{m}$ = steam quantity in kg/h
k = factor for superheating of steam
= $1 + 0.0012 \cdot \Delta T$
(k = 1 for saturated steam)
ΔT = temperature differential in K between saturated steam and superheated steam

Example

given saturated steam 179.9 °C

p_1 = 1000 kPa (10 bar)

$\dot{m}$ = 5800 kg/h

pressure ratio = 30 %

required k_{vs}, valve type

procedure

$$p_3 = p_1 - \frac{30 \cdot p_1}{100}$$

$$p_3 = 1000 - \frac{30 \cdot 1000}{100} = 700 \text{ kPa (7 bar)}$$

$$k_{vs} = 4.4 \cdot \frac{5800}{\sqrt{700 \cdot (1000 - 700)}} \cdot 1 = 55.7 \text{ m}^3/\text{h}$$

selected k_{vs} = 78 m^3/h ⇨ VVF529.80K

Notes

Engineering

We recommend installation in the return pipe, as the temperatures in this pipe are lower for applications in heating systems, which in turn, extends the stem sealing gland's life.

⚠ In open circuits the valve plug may seize as the result of scale deposits. In these applications, only the most powerful SKD… or SKB… actuators should be used. Further the valve should be exercised at regular intervals (two to three times per week). A strainer MUST be fitted at the valve inlet

Ensure cavitation free flow (refer to page 5).

⚠ To ensure the reliability of the valve, we recommend the fitting of a strainer at the valve inlet even in closed circuits.

The use of these valves for steam is subject to specific parameters:
Observe diagram for steam on page 6 and «Technical Data» on page 9!

Mounting

Both valve and actuator can easily be assembled at the mounting location. Neither special tools nor adjustments are required.

The valve is supplied with Mounting Instructions 74 319 0357 0.

Orientation

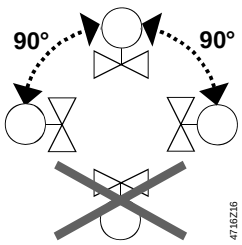

Direction of flow

When mounting, pay attention to the valve's flow direction symbol **→.**

Commissioning ⚠ **Commission the valve only if the actuator has been mounted correctly.**

Valve stem retracts: valve opens = increasing flow
Valve stem extends: valve closes = decreasing flow

Maintenance

VVF529... valves require no maintenance.

Warning ⚠

When doing service work on the valve / actuator:

- Deactivate the pump and turn off the power supply
- Close the shutoff valves
- Fully reduce the pressure in the piping system and allow pipes to completely cool down

If necessary, disconnect the electrical wires.

Before putting the valve into operation again, make certain the actuator is correctly fitted.

Stem sealing gland

The glands can be exchanged without removing the valve, provided the pipes are depressurized and cooled off and the stem surface is unharmed.
If the stem is damaged in the gland range, replace the entire stem-plug-unit.
Contact your local office or branch.

Disposal

Before disposal the valve must be dismantled and separated into its various constituent materials.
Legislation may demand special handling of certain components, or it may be sensible from an ecological point of view.
Current local legislation must be observed.

Warranty

The technical data given for these applications is valid only in conjunction with the Siemens actuators as detailed under «Equipment combinations», page 2.
All terms of the warranty will be invalidated by the use of actuators from other manufacturers.

Technical data

Functional data	PN class		PN 25 to EN 1333
	Working pressure		to ISO 7005 within the permissible medium temperature range according to the diagram on page 6
	Flow characteristic	• 0…30 %	• linear
		• 30…100 %	• equal percentage; n_{gl} = 3 to VDI / VDE 2173
	Leakage rate		0…0.05 % of k_{vs} value to DIN EN 1349
	Permissible media:	water	cooling water, chilled water, low temperature hot water, high temperature hot water, water with anti-freeze; recommendation: water treatment to VDI 2035
		brine	
		steam	saturated steam dryness at inlet minimum 0.98 subcritical pressure gradient
		heat transfer oils	mineral-oil based heat transfer oils
	Medium temperature		
		water, brine	1…220 °C
		saturated steam	≤ 220 °C ≤ 1600 kPa (16 bar) abs permissible temperature and pressure range according to the diagram on page 6
		heat transfer oils	≤ 220 °C
	Rangeability S_v		> 50
	Nominal stroke		DN 50…65: 20 mm DN 80…150: 40 mm
Industry standards	Pressure Equipment Directive		PED 97/23/EC
	Pressure Accessories		as per article 1, section 2.1.4
	Fluid group 2:	• DN 50…100	• category I, with CE-marking
		• DN 125…150	• category II, with CE-marking, test authority number 1015
Materials	Valve body		nodular cast iron EN-GJS-400-18-LT
	Stem		stainless steel
	Plug, seat		stainless steel
	Sealing gland		stainless steel
	Gland materials		PTFE sleeve
Dimensions / Weight	Refer to «Dimensions»		
	Flange connections		to ISO 7005

Dimensions

Dimensions in mm

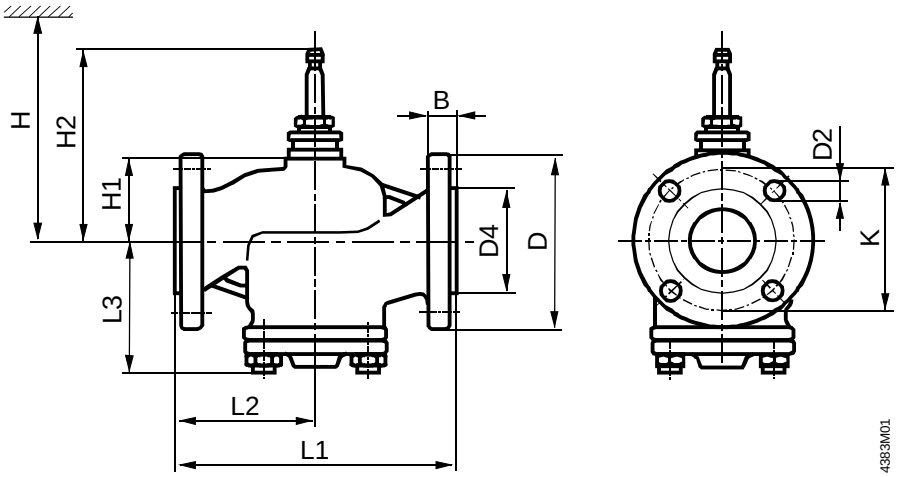

DN	B	D	D2	D4	K	L1	L2	L3	H1	H2	H			kg
		Ø	Ø	Ø							SKD…	SKB…	SKC…	[kg]
50	20	165	19 (4x)	102	125	230	115	117	72	168	> 572	> 647		14
65	22	185	19 (8x)	122	145	290	145							18
80	24	200		138	160	310	155	152	106	222			> 681	26
100		235	23 (8x)	158	190	350	175							38
125	26	270	28 (8x)	184	220	400	200	175	134	250			> 709	58
150	28	300		212	250	480	240	200						78

DN = Nominal size

H = Total actuator height plus minimum distance to the wall or the ceiling for mounting, connection, operation, maintenance etc.

H1 = Dimension from the pipe centre to install the actuator (upper edge)

H2 = Valve in the «Closed» position means that the valve stem is fully extended